ROUND 3 - Saturday, September 17, 2022

SHOTLINK

Fortinet Championship

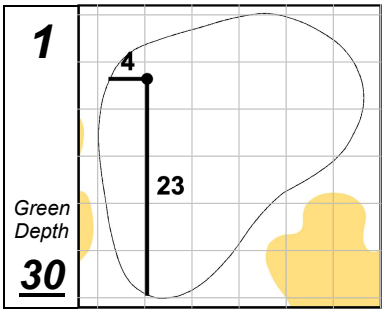

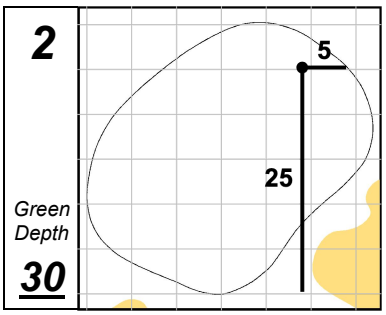

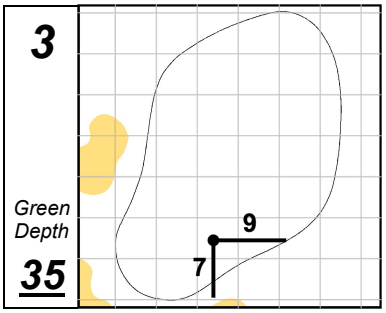

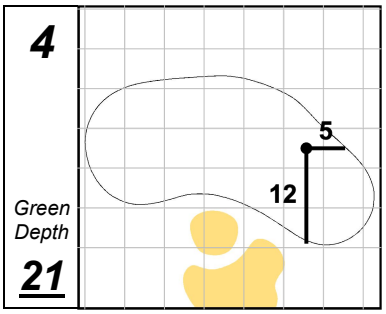

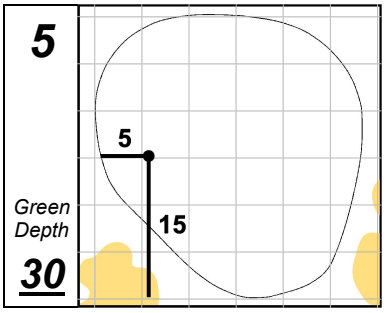

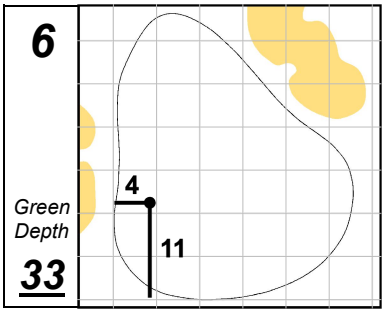

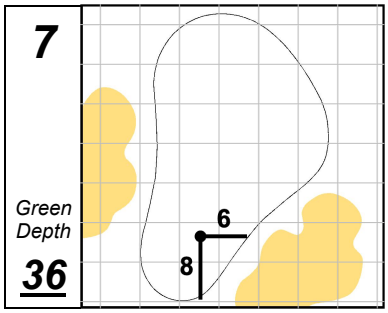

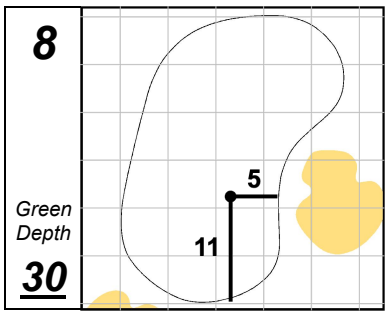

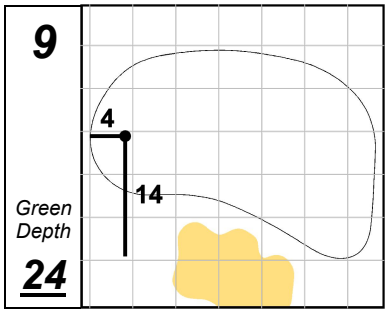

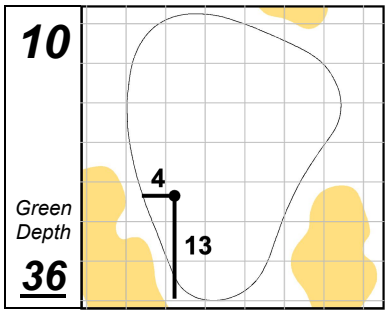

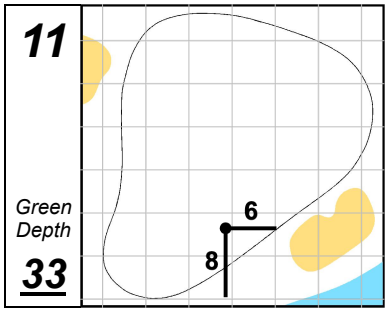

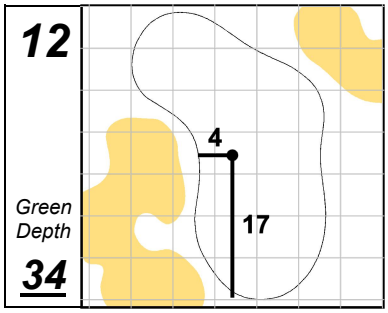

Silverado Resort and Spa (North Course)

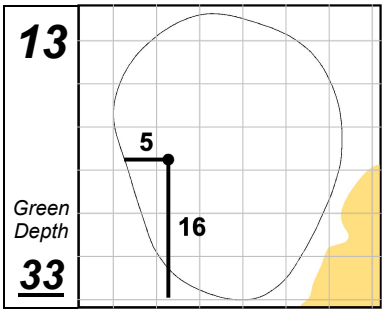

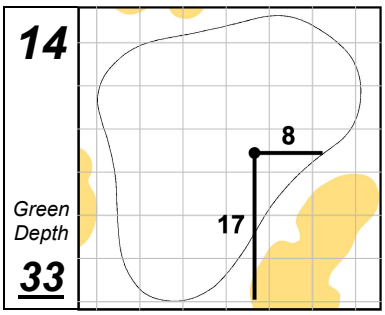

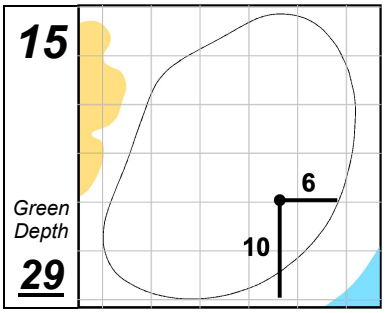

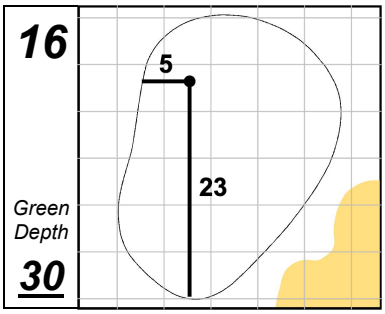

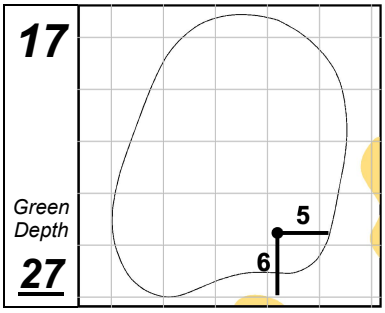

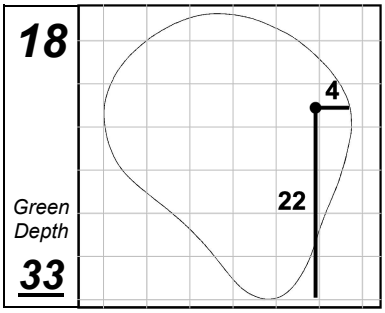

Each side of a complete square on the green represents 5 YARDS.

Friday, September 16, 2022 9:03:46 AM